Mooney*
1” Flowgrid* Regulator
with **Shutoff Valve**

CL 300 NPT and SWE

Flowgrid Regulator with Integral Shutoff Valve, Series 41D Dual Function Controller, optional Series 20 Pilot, Type 24 Restrictor and Type 30 Filter.

The 1” Mooney Flowgrid Slam Shut is a combination of a regulator and a slam shut. In addition to pressure regulation, this pneumatically actuated device provides automatic downstream pressure protection. By separating the pneumatic controller and mechanical latching mechanism, shut off occurs only when designated set points are reached. The patent pending design prevents disruptive and costly “accidental shutoffs”. Positive shutoff is achieved instantly through the snap acting mechanism, and reset can be completed with common tools.

Specifications

Size	1”
Body Style	Standard Single Port with Slam Shut
End Connections	1” CL 300 NPT, 1” CL 300 SWE 1” CL 150 RF, 1” CL 300 RF
Temperature	Working -20°F to 150°F (-29°C to 65°C)
Maximum Differential	740 psi
Minimum Differential	Refer to graph on page 2
Cracking Differential	Refer to graph on page 2
Maximum Inlet Pressure	740 psig (50 bar)
Outlet Pressure Range	5-450 psig (0.34 - 31 bar)
Flow Direction	Uni-Directional
Body Taps	Four 1/4” - 18 NPT

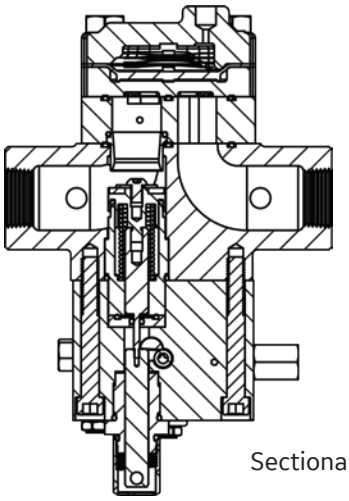

Sectional View

Materials of Construction

Valve Body, Bleed Plate & Spring Case	Carbon Steel WCB
Throttle Plate	17 - 4 PH or A515
Slam Shut Seat	SST
Slam Shut Seal	Nitrile
Flowgrid Diaphragm	Nitrile or Viton®
Slam Shut Housing, Slam Shut Spring Case	Aluminum
Spring Cover	Aluminum
Rotating Shaft	SST
Main Shaft Guide	Delrin
End Cap	Lexan
Plug Seal	Nitrile
O-Rings	Nitrile

Stock Numbers

1” Flowgrid & Shutoff Valve	Stock Number	Weight
CL 300 NPT	SG-123	21 lbs.
CL 300 SWE	SG-125	21 lbs.
CL 150 RF		
CL 300 RF		

BHGE Data Classification : Public

Dimensions

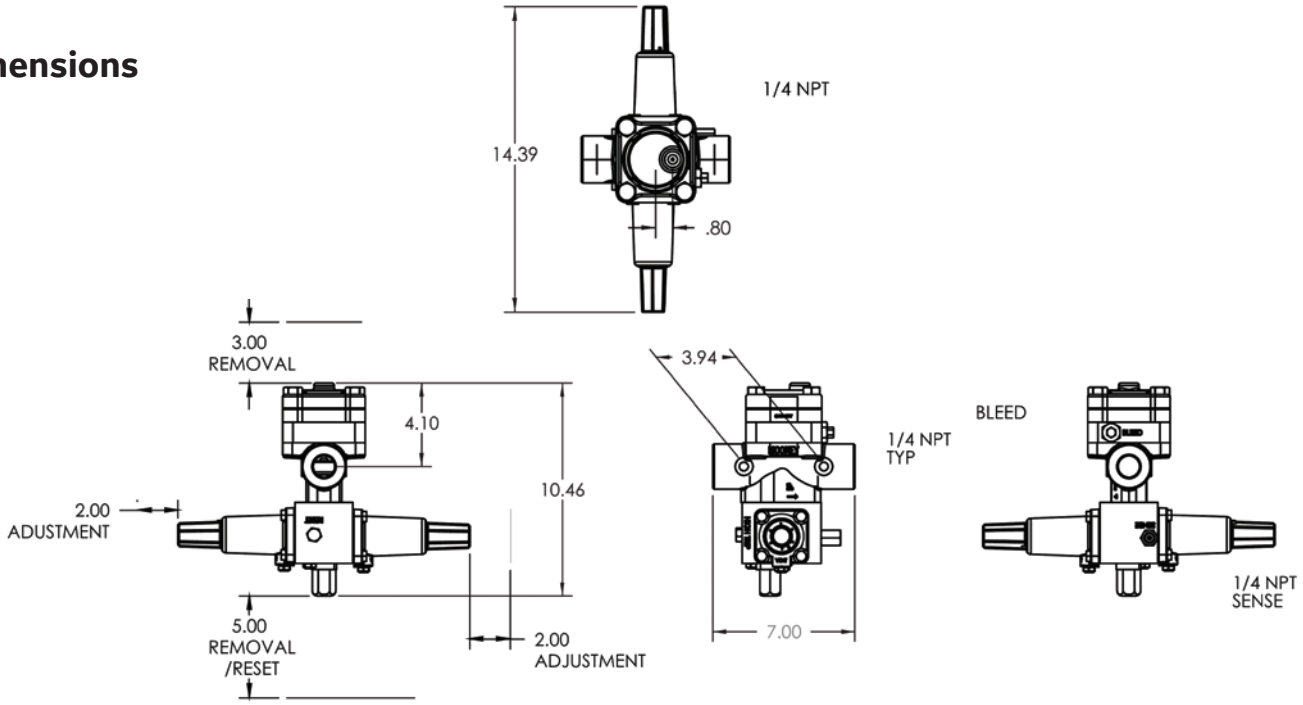

Flow Coefficients and Constants

12" Dual Port Valve				Swage Factor	
% Capacity	Cv	C_1	C_g	1.5:1	2:1
100%	108	38	410	0.96	0.93
75%	80	35	280	0.97	0.95
50%	67	30	200	0.98	0.96
35%	33	30	100	1.00	0.99

NOTE: To reset SSV, sense pressure must be reduced (or increased for Under Pressure) by 20% or more of set pressure.

Minimum Pressure Differential vs. Capacity

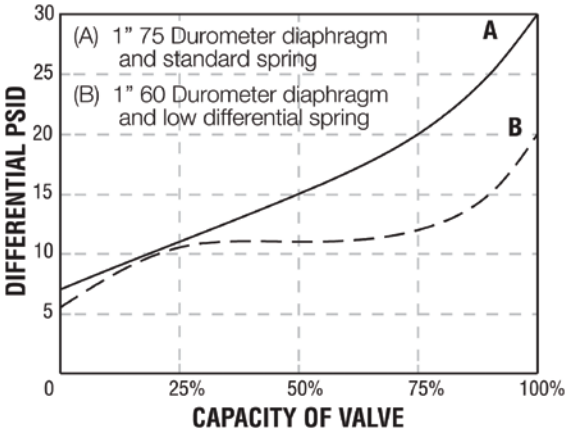

Diaphragm Selection

	Compound	Temp. Range (°F)	Maximum Differential	Characteristics	Recommended Applications
Flowgrid Regulator	75 Duro	-20 to 150	1000 psid	Best All Around Material	60 psid to Max. Differential
	60 Duro	-25 to 150	300 psid	Best Shutoff at Low Differential Pressure	Low Differential (100 psid or less) or Low Temperature
	80 Duro High ACN	-5 to 175	1000 psid	Higher Abrasion and Swelling Resistance	High Differential (400 psid or higher) or Abrasive Conditions with Distillates
	80 Duro Low ACN	-20 to 150	1000 psid	Higher Abrasion Resistance and Low Temperature Flexibility	High Differential (400 psid or higher) or Abrasive Conditions at Low Temperatures
SSV Plug Seal	90 Duro Nitorle	10 to 150	740 psid	Best High Pressure Abrasive Materials	High Differential Applications or Abrasive Conditions with or without Distillates
	80 Duro Nitrile Low ACN	-20 to 150	740 psid	Best Lower Pressure Low Temperature Material	Low Temperature

bhge.com

*Denotes a trademark of Baker Hughes, a GE company LLC.

Other company names and product names used in this document are the registered trademarks or trademarks of their respective owners.

© 2018 Baker Hughes, a GE company LLC - All rights reserved.

Baker Hughes reserves the right to make changes in specifications and features shown herein, or discontinue the product described at any time without notice or obligation. Contact your BHGE representative for the most current information. The Baker Hughes logo is a trademark of Baker Hughes, a GE company. The GE Monogram is a trademark of the General Electric Company.

GEA34049 12/2018